Year 9 Circles, Area and Volume – Mixed Practice

HappyKids.fit

Year 9 · Maths · Circles, Area, Surface Area and Volume · Mixed practice · 30 questions

Name _____ **Date** _____

A. Mixed practice (mixed order)

1. A cylinder has radius 8 cm and height 9 cm. Find its volume. Use π = 3.14.

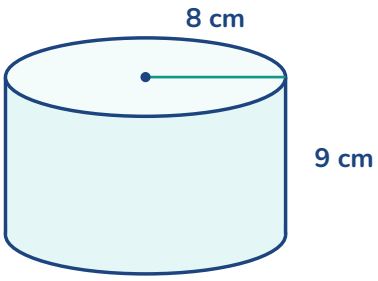

Answer _____

2. Find the circumference of a circle with diameter 5 m. Give your answer in terms of π.

Answer _____

3. Find the area of a circle with diameter 14 cm. Give your answer in terms of π.

Answer _____

4. How many planes of symmetry does a triangular prism whose ends are equilateral triangles have?

Answer _____

5. Find the area of a circle with diameter 16 m. Use π = 3.14.

Answer _____

6. Convert 7.5 kilograms to grams.

Answer _____

7. The diagram shows a semicircle with diameter 24 cm. Find its area and its perimeter. Use π = 3.14.

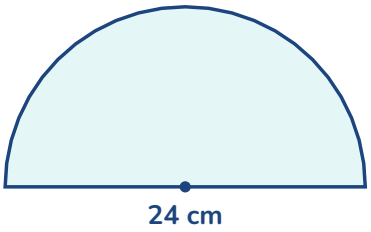

Answer _____

8. A cylinder has radius 3 m and height 11 m. Find its volume in terms of π.

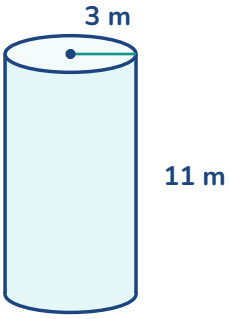

Answer _____

9. Find the circumference of a circle with radius 12 m. Give your answer in terms of π.

Answer _____

10. A circle has a circumference of 20π mm. Find its area in terms of π.

Answer _____

11. A square-based pyramid has a base of side 10 cm. Each triangular face has a perpendicular height of 15 cm. Find its surface area.

Answer _____

12. The end wall of a shed is a rectangle 12 m wide and 6 m high with a triangle of height 5 m on top. Find the area of the wall.

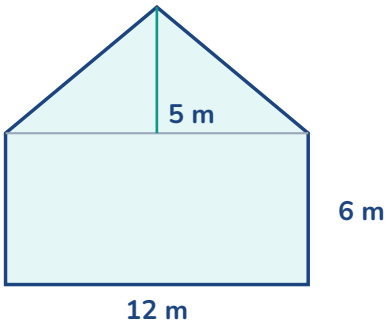

Answer _____

13. A prism has a volume of 96 cm^3 and a cross-section of area 24 cm^2. How long is the prism?

Answer _____

14. A paper label covers the curved surface of a tin with radius 5 cm and height 8 cm. Find the area of the label. Use $\pi = 3.14$.

Answer _____

15. Bella says that 6 m^2 = 600 cm^2 because 1 m = 100 cm. Explain the mistake and give the correct area in cm^2.

Answer _____

16. Find the area of a circle with radius 8 cm. Use $\pi = 3.14$.

Answer _____

17. A square tile has sides of 9 cm. A quarter circle of radius 2 cm is cut from one corner. Find the area of the tile that is left. Use π = 3.14.

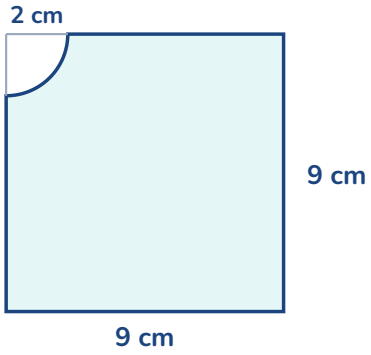

Answer _____

18. How many planes of symmetry does a cylinder have?

Answer _____

19. A circle has a circumference of 8π mm. Find its area in terms of π.

Answer _____

20. Find the circumference of a circle with diameter 14 m. Give your answer in terms of π.

Answer _____

21. Dina says a cube has more planes of symmetry than a cuboid with all sides different. Is Dina right? Explain.

Answer _____

22. A cylindrical water tank has radius 40 cm and height 60 cm. How many litres does it hold when full? Use $\pi = 3.14$ and 1 litre = 1000 cm^3.

Answer _____

23. A cylinder has radius 6.4 cm and height 5.3 cm. Estimate its volume using $\pi \approx 3$ and each length rounded to the nearest whole number. Then calculate the volume using $\pi = 3.14$, giving your answer to 1 decimal place.

Answer _____

24. A cube has a volume of 64 cm^3. Find its surface area.

Answer _____

25. The diagram shows a semicircle with diameter 16 cm. Find its area and its perimeter. Use $\pi = 3.14$.

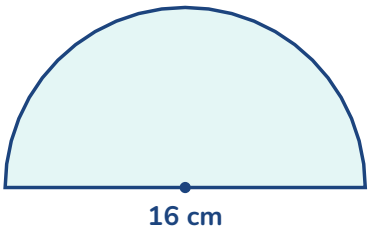

Answer _____

26. A farm tank holds 3.5 kilolitres. How many 4-litre buckets can it fill?

Answer _____

27. A cylinder has radius 2 cm and a volume of 48π cm^3. Find its height.

Answer _____

28. Convert 25 megalitres to kilolitres.

Answer _____

29. A prism is 17 cm long. Its cross-section is a trapezium with parallel sides 8 cm and 12 cm and height 8 cm. Find its volume.

Answer _____

30. A circle has diameter 18 cm. Eli works out its area as $3.14 \times 18^2 = 1017.36$ cm^2. Explain the mistake and find the area.

Answer _____