Year 9 Angles and Pythagoras – Mixed Practice

HappyKids.fit

Year 9 · Maths · Angles, Polygons and Pythagoras' Theorem · Mixed practice · 30 questions

Name _____ **Date** _____

A. Mixed practice (mixed order)

1. Find the length of the side marked x. Give your answer to 1 decimal place.

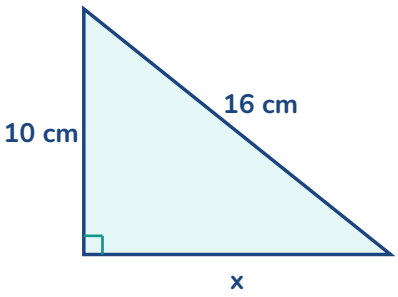

Answer _____

2. Find the size of each interior angle of a regular 36-sided polygon.

Answer _____

3. Find the length of the side marked x. Give your answer to 1 decimal place.

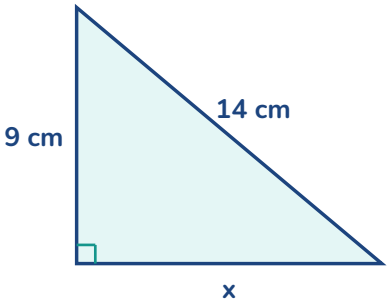

Answer _____

4. Find the sum of the interior angles of a 15-sided polygon.

Answer _____

5. A boat sails 15 km due east and then 8 km due north. How far is it from its starting point?

Answer _____

6. The exterior angles of a hexagon are 31°, 60°, 27°, 84°, 58° and y. Find y.

Answer _____

7. Find the length of the side marked x. Give your answer to 1 decimal place.

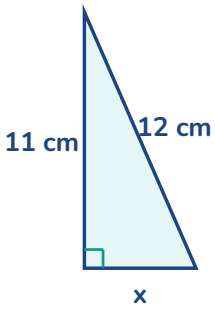

Answer _____

8. A rectangular field is 90 m by 120 m. How much shorter is it to walk straight across the diagonal than along two sides?

Answer _____

9. Explain how to construct an angle of 45° with a ruler and compasses only. Which angle do you construct first, and what do you then do to it?

Answer _____

10. Find the sum of the interior angles of an octagon.

Answer _____

11. Each exterior angle of a regular polygon is 15°. How many sides does it have?

Answer _____

12. A right-angled triangle has hypotenuse 17 cm and another side 15 cm. Hana finds the third side as $\sqrt{(17^2 + 15^2)}$. Explain the mistake and find the side.

Answer _____

13. A hexagon has interior angles 105°, 110°, 102°, 138°, 135° and x. Find x.

Answer _____

14. The lines marked with arrows are parallel. Find the angle x. Give a reason for each step.

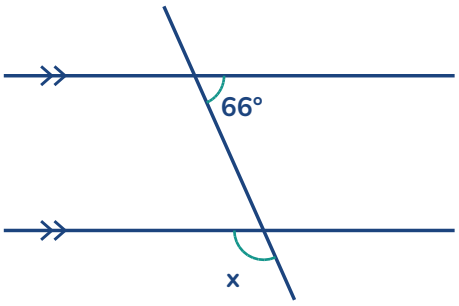

Answer _____

15. ABCD is a trapezium with AB parallel to DC. Angle A = 57° and angle C = 122°. Find angles B and D. Give reasons.

Answer _____

16. Find the size of each exterior angle of a regular hexagon.

Answer _____

17. A triangle has sides 12 cm, 16 cm and 20 cm. Is it right-angled? Show how you know.

Answer _____

18. To construct a regular hexagon you draw a circle of radius 3 cm and step the compasses, still set to 3 cm, round the circle. How long is each side of the hexagon, and what is the angle at the centre between neighbouring corners?

Answer _____

19. The interior angles of a polygon add up to 900°. How many sides does it have?

Answer _____

20. The lines marked with arrows are parallel. Find the angle x. Give a reason for each step.

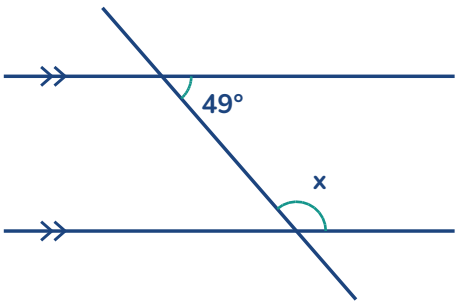

Answer _____

21. ABCD is a parallelogram with angle A = 102°. Find angles B, C and D. Give reasons.

Answer _____

22. Amir says each interior angle of a regular 15-sided polygon is 360 ÷ 15 = 24°. Explain the mistake and find the interior angle.

Answer _____

23. Find the sum of the interior angles of a heptagon. Answer _____

24. A hexagon has interior angles 96°, 108°, 159°, 113°, 105° and x. Find x.

Answer _____

25. Show that each interior angle of a regular octagon is 135° in two different ways.

Answer _____

26. Ivo says the interior angles of every hexagon add up to 720°. Is Ivo right? Explain.

Answer _____

27. The exterior angles of a pentagon are 77°, 78°, 81°, 88° and y. Find y.

Answer _____

28. Find the size of each exterior angle of a regular 18-sided polygon.

Answer _____

29. Find the length of the side marked x. Give your answer to 1 decimal place.

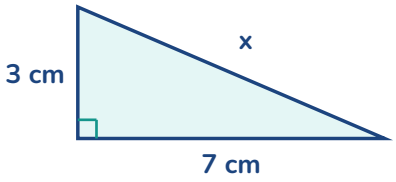

Answer _____

30. A ramp is 5 m long and rises 1 m. How far does it reach along the level ground? Give your answer to 1 decimal place.

Answer _____