Year 9 Angles and Pythagoras – Developing

HappyKids.fit

Year 9 · Maths · Angles, Polygons and Pythagoras' Theorem · Level 2 Developing · 10 questions

Name _____ **Date** _____

A. Use angle facts and Pythagoras

1. Each exterior angle of a regular polygon is 24°. How many sides does it have?

Answer _____

2. A hexagon has interior angles 128°, 99°, 150°, 132°, 148° and x. Find x.

Answer _____

3. The lines marked with arrows are parallel. Find the angle x. Give a reason for each step.

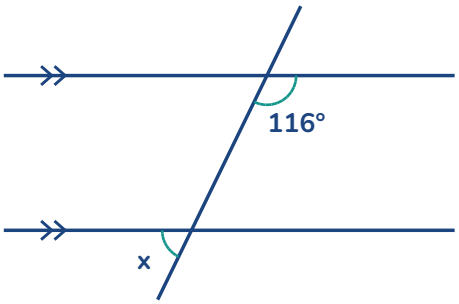

Answer _____

4. The lines marked with arrows are parallel. Find the angle x. Give a reason for each step.

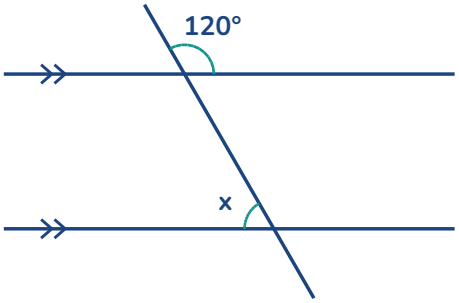

Answer _____

5. ABCD is a trapezium with AB parallel to DC. Angle A = 73° and angle C = 117°. Find angles B and D. Give reasons.

Answer _____

6. ABCD is a rhombus with angle ABC = 70°. The diagonal AC is drawn. Find angle BAC. Give reasons.

Answer _____

7. Find the distance between the points (−4, 0) and (1, 3). Give your answer to 1 decimal place.

Answer _____

8. A regular pentagon is drawn inside a circle by marking its corners on the circle with a protractor at the centre. What angle must there be between neighbouring radii, and what is each interior angle of the polygon?

Answer _____

9. Find the length of the side marked x. Give your answer to 1 decimal place.

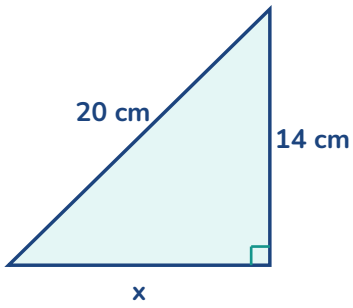

Answer _____

10. The two shorter sides of a right-angled triangle are 20 cm and 21 cm. Dina writes the hypotenuse as $20^2 + 21^2 = 841$ cm. Explain the mistake and find it.

Answer _____