Year 8 Angles and Constructions – Challenge

HappyKids.fit

Year 8 · Maths · Angles, Polygons and Constructions · Level 3 Challenge · 8 questions

Name _____ **Date** _____

A. Think like a mathematician

1. Hana says every square is a rhombus. Is Hana right? Explain.

Answer _____

2. Ivo says every rhombus is a square. Is Ivo right? Explain.

Answer _____

3. Kofi says every trapezium has a line of symmetry. Is Kofi right? Explain.

Answer _____

4. A triangle has interior angles 53° and 71° opposite an exterior angle. Kofi says the exterior angle is 180 − (53 + 71) = 56°. Explain the mistake.

Answer _____

5. In triangle ABC, angle A = 74° and angle C = 48°, and AB is extended beyond B. Bella says the exterior angle at B equals angle C, 48°. Explain the mistake and find it.

Answer _____

6. Explain why the exterior angle of a triangle equals the sum of the two interior opposite angles. Use angles a, b and c in triangle ABC, with the exterior angle x at B.

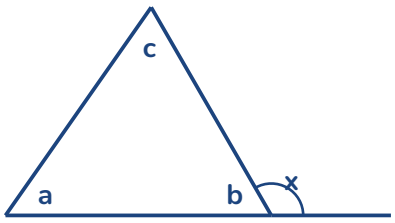

Answer _____

7. The lines marked with arrows are parallel. Write an equation and find x. Give a reason.

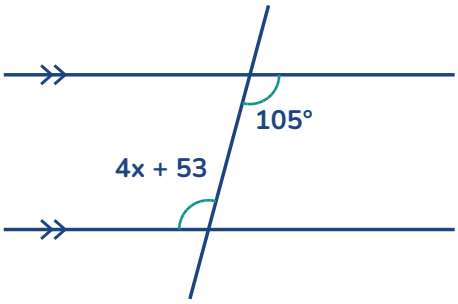

Answer _____

8. In a triangle, the two interior opposite angles to an exterior angle are x and 2x. The exterior angle is 63°. Find x and the size of each angle.

Answer _____